ZWD VERSION - 3400 RPM

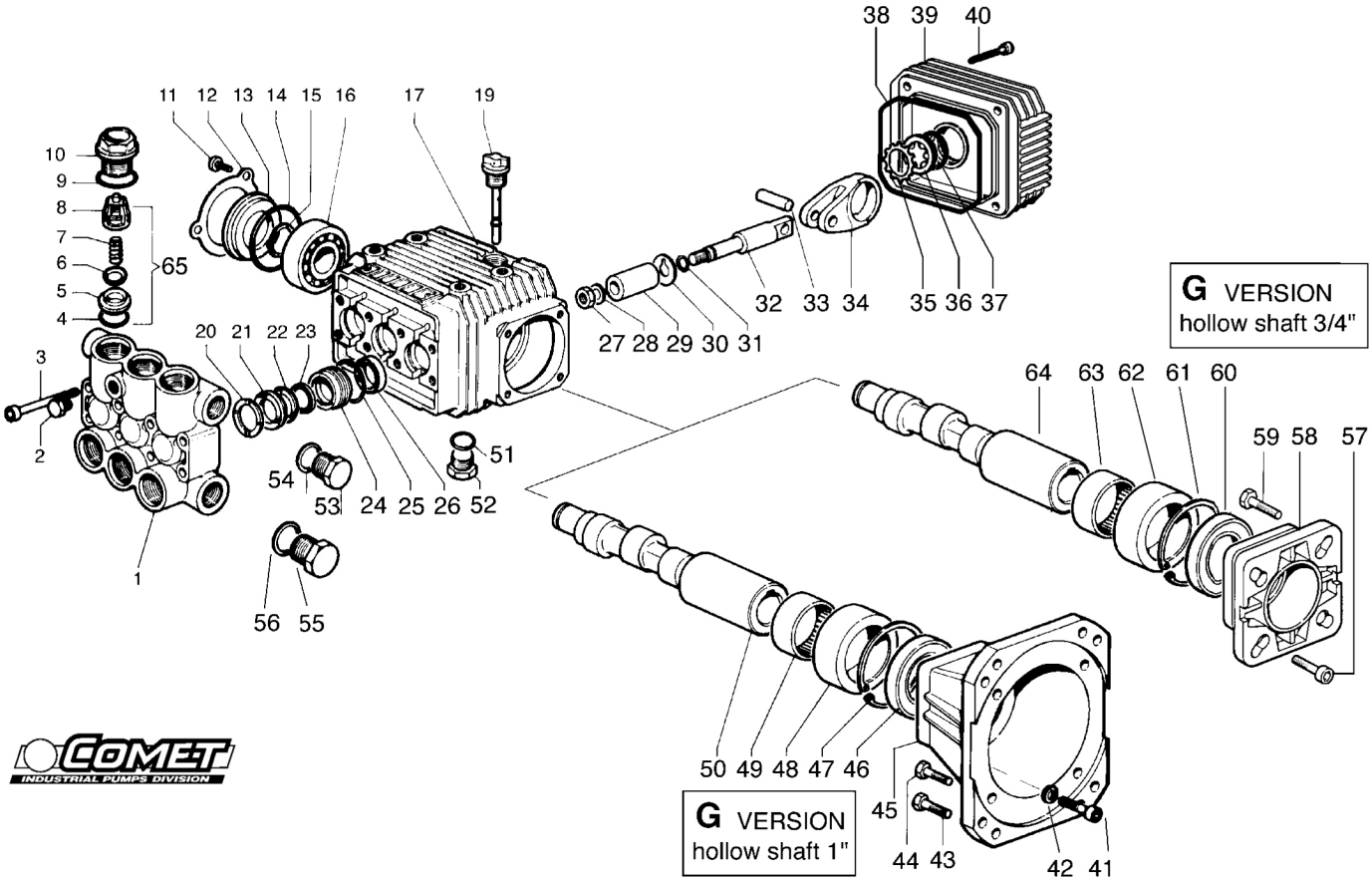

ITEM	PART No.	KIT	DESCRIPTION	Qty.	MODELS
1	3218.0126.00		MANIFOLD Ø 15 BRASS	1	2530 G - 3030 G 3522 G - 3525 G 3530 G - 4020 G 4030 G
	3218.0127.00		MANIFOLD Ø 15 BRASS	1	3540 G - 4040 G
2	3202.0018.00		CAP G1/8	1	
3	3609.0152.00		SCREW M6X55	8	2530 G - 3030 G 3522 G - 3525 G 3530 G - 4020 G 4030 G
	3609.0156.00		SCREW M8X55	8	3540 G - 4040 G
4	1210.0046.00	A-D	O-RING 2,62X 17,13 mm	6	
5	3009.0087.00	A	VALVE SEAT	6	
6	3604.0017.00	A	VALVE PLATE	6	
7	1802.0177.00	A	SPRING	6	
8	1205.0025.00	A	VALVE GUIDE	6	
9	1210.0048.00	A-D	O-RING 2,62X 20,24 mm	6	
10	3202.0239.00		CAP	6	
11	3609.0088.00		SCREW M5X10	3	
12	1004.0012.00		CRANKCASE COVER	1	
13	0402.0172.00		SPACER	1	
14	1210.0386.00	D	O-RING 3,53X44,04 mm	1	
15	3019.0011.00		SNAP RING	1	
16	0438.0069.00		BALL BEARING 20X52X15 mm	1	
17	0403.0128.00		CRANKCASE	1	2530 G - 3030 G 3522 G - 3525 G 3530 G - 4020 G 4030 G
	0403.0141.00		CRANKCASE	1	3540 G - 4040 G
19	3200.0051.00		OIL DIPSTICK	1	

ITEM	PART No.	KIT	DESCRIPTION	Qty.	MODELS
20	0009.0196.00	B	HEAD RING Ø15 mm	3	
21	1241.0034.00	B	PACKING Ø15 mm	3	
22	0009.0223.00	B	RING Ø 15 mm	3	
23	1241.0030.00	B	PACKING 15X22X5,5 mm	3	
24	0009.0222.00		RING Ø15 mm	3	
25	1210.0223.00	B	O-RING 1,78X26,7 mm	3	
26	0019.0095.00	D	OIL SEAL15X24X5 mm	3	
27	0600.0048.00	C	NUT	3	
28	2811.0080.00	C	WASHER 8,2X14X1,5 mm	3	
29	0202.0020.00	C	PISTON Ø15 mm	3	
30	2812.0038.00	C	WASHER	3	
31	1210.0055.00	C-D	O-RING 1,78X 6,07 mm	3	
32	2409.0044.00		PISTON GUIDES	3	
33	3011.0014.00		WRIST. PIN	3	
34	0205.0050.00		CON. ROD	3	
35	3019.0033.00		SNAP RING Ø18 mm	1	
36	3201.0012.00		OIL INDICATOR	1	
37	1210.0333.00	D	O-RING 1,78X23,52 mm	1	
38	1210.0206.00	D	O-RING 2,62X101,27 mm	1	
39	0402.0220.00		CRANKCASE COVER	1	
40	3609.0041.00		SCREW M6X25	4	
51	1210.0441.00	D	O-RING2X14 mm	1	
52	3200.0007.00		CAP 3/8 GAS OT 58	1	
53	3200.0007.00		CAP 3/8 GAS OT 58	1	
54	2811.0084.00		WASHER 16,7x22x1,5 mm	1	
55	3202.0015.00		CAP G 1/2	1	
56	2811.0086.00		WASHER 21,2X27X1,5 mm	1	
65	1220.0030.00		VALVE ASS. BLY.	6	